1862027
Mirror Turn-Around
Parts and Hardware List

A.	Wardrobe	1 pc
B.	Shelves	2 pcs
C.	Shelf Support Pins	8 pcs
D.	Phillips Head Screwdriver	1 pc
E.	Small Hooks	2 pcs
F.	Metal Rack	1 pc
G.	Long Screws	2 pcs
H.	Short Screws	4 pcs

∗ Please make sure that you have all the parts and hardware indicated above before you begin assembly of this item.
∗ Use the hardware illustrations to determine correct piece and size.
∗ This item should be assembled on a soft surface to prevent scratching the finish during assembly.
∗ This item may require periodic tightening.
∗ This item is to be assembled by an adult and is not intended to be taken apart by a child.

Hardware Illustrations

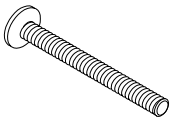

G. Long Screw

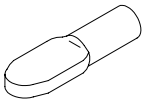

C. Shelf Support Pin

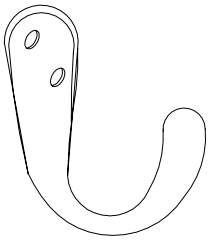

E. Small Hook

H. Short Screw

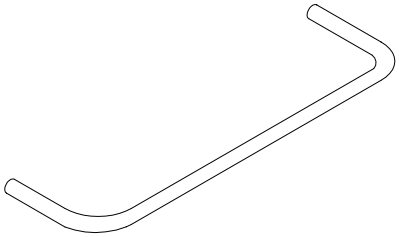

F. Metal Rack

1862027
Mirror Turn-Around

Attach Hardware

Parts required

A.	Wardrobe	1 pc	F.	Metal Rack	1 pc
D.	Phillips Head Screwdriver	1 pc	G.	Long Screws	2 pcs
E.	Small Hooks	2 pcs	H.	Short Screws	4 pcs

1. **Attach Small Hooks (E)** Align the pre-drilled holes in the Small Hooks (E) with pre-drilled holes in the back panel of the Wardrobe (A). Insert the Short Screws (H) through the Small Hooks (E) and secure to the back panel by using Phillips Head Screwdriver (D). See Illustration #1.
2. **Attach Metal Rack (F)** Align the pre-threaded holes in the Metal Rack (F) with holes in the back panel of the Wardrobe (A). Insert the Long Screws (G) through the back panel of the Wardrobe (A) from inside and secure to the Metal Rack (F) by using Phillips Head Screwdriver (D). See Illustration #1.

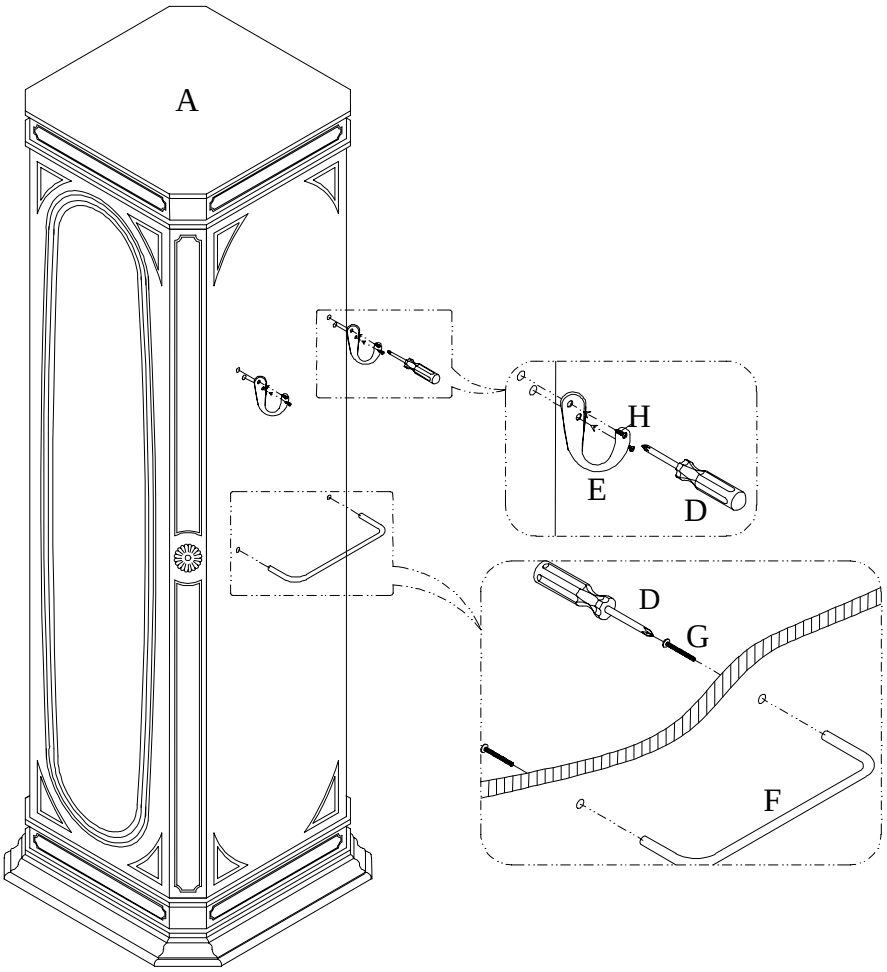

Illustration #1

1862027
Mirror Turn-Around

Install Shelves

Parts required

A.	Wardrobe	1 pc	C.	Shelf Support Pins	8 pcs
B.	Shelves	2 pcs			

3. **Install Shelves (B)** Insert the Shelf Support Pins (C) into the pre-drilled holes inside of Wardrobe (A) at desired locations. Place the Shelves (B) onto the Shelf Support Pins (C) in the Wardrobe (A). See Illustration #2.

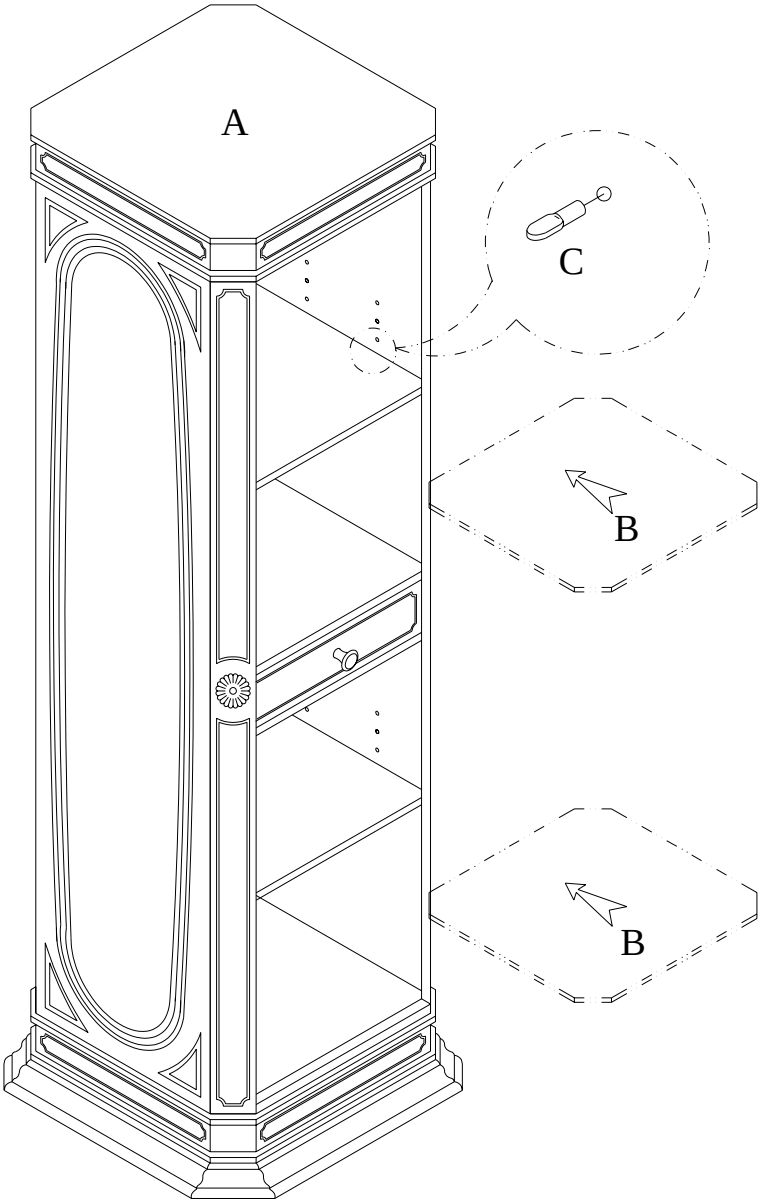

Illustration #2